

ESIJET ™ Printing Technology

Ross N. Mills
Imaging Technology International Corporation, Boulder, Colorado

Abstract

Impulse or Drop-On-Demand ink jet printing technologies such as piezoelectric and thermal (bubble) account for a major segment of the non-impact printing market. An alternative impulse ink jet technology is electrostatic ink jet. Although electrostatic ink jet was first patented for printing application in the 1950's and several products or prototypes have been introduced, technical issues have prevented the technology from being successful in the non-impact printing market. This paper will discuss the history and the physics of operation of single channel and multi-channel electrostatic ink jet. In addition, a new print head application of ElectroStatic Ink JET known as ESIJET™ (pronounced "easy jet") will be introduced.

Introduction

Drop-On-Demand ink jet printing is currently dominated by thermal (bubble) ink jet and piezoelectric ink jet technology.[1] While significantly different in mechanism, both types transfer ink by the interaction of a pressure wave created in an ink cavity with a negative pressure ink meniscus residing in a nozzle. This interaction projects an ink volume from the nozzle to the paper in the form of individually controlled drops. The acoustic "push" mechanism makes both technologies susceptible to drop outs due to ingested air bubbles in the driver ink cavity. This is especially true for piezoelectric technology which has a larger cavity volume. Piezoelectric technology generally enjoys a more well behaved drop formation process due to higher ink viscosity and has a wider latitude for ink formulation when compared to thermal ink jet. The relatively low packing density of piezoelectric drivers generally leads to higher cost and bulkier print head assemblies. While the packing density of bubble jet is considerably more efficient, ink drying and color bleeding problems continue to be troublesome for the water based inks required in thermal ink jet systems.[2] In addition, the relatively small nozzle size for both technologies (approximately 50 μm for 300 dpi) requires careful attention to ink formulation, ink filtering and nozzle exit maintenance. If some or all of these inherent problems can be mitigated by the introduction of an alternate ink jet technology which maintains or improves cost, performance and quality, then clearly the market acceptance of ink jet printing will continue to be enhanced. Electrostatic or Electrohydrodynamic ink jet is such a technology. Electrostatic ink jet draws on assets of both electrophotographic and ink jet technology to offer a unique printing system. The two inhibitors to the technology have been excessive drive voltage and inadequate manufacturability.

An understanding of single channel operation, a method for reducing the driving voltage and applying this knowledge to multi-channel operation are the key steps to demonstrating product feasibility. In addition, manufacturability of large arrays of nozzles at low cost must also be demonstrated.

Single Channel Operation

A liquid will deform in the presence of an electrostatic field. This phenomenon was first documented by Gilbert in 1600.[3] He noted that a droplet of water on a flat surface will deform into a conical shape when a piece of electrostatically charged amber is held near it. It was the investigative work of Sir Geoffrey I. Taylor[4] in the early 1960's which gave rise to the term "Taylor cone" to describe the shape resulting from the balance of electrostatic, gravitational, surface tension and internal pressure forces acting on a small volume of liquid exposed to an electrostatic field. The field attempts to pull the atoms in the liquid out along the field gradient while surface tension attempts to hold the liquid flat. Both the electrostatic and surface tension forces are inversely proportional to the square of the radius of curvature of the liquid surface. The sharper the curvature of the liquid, the more intensely the electrostatic field pulls it out and the greater the surface tension force attempting to restore it to a flat surface. The result is a conical shape with a half-angle of 49.3 degrees which is independent of the fluid properties. At the tip of an idealized Taylor cone, both the electrostatic field intensity and the surface tension forces become infinite. Before this occurs in practice, a thin filament of fluid is drawn out from the tip of the cone along the electrostatic field gradient. Thus the nozzle and meniscus system can be referred to as the filament nucleation site (FNS) It is this phenomenon which forms the basis for ElectrosStatic Ink JET (ESIJET™) printing.

The use of electrostatic ink jet in printing technologies has been investigated by a number of researchers since the middle of this century.[5-11] In the last five years, investigators at Fuji Xerox Co. have been studying the combination of electrostatic ink jet and thermal ink jet.[12] Matsushita Electric Industrial Co. has started to examine the possibility of a multi-nozzle air assisted electrostatic ink jets.[13-16] The last three years have seen some renewed interest in single channel investigations. Most notable among these is the work at IBM [17,18] in which they have characterized single channel operation and demonstrated both single nozzle binary and continuous tone printing.

In single channel operation the paper is transported on or across a platen which is electrically grounded relative to the conductive FNS. The FNS (which for single channel operation consists of a section of tubing with an inside diameter of 250 m and a wall thickness of 50 m) is positioned at a distance of 1 to 1.5 mm from the platen (a wide variety of tube sizes and gaps can be used). This FNS exit size is typically large when compared to conventional ink jet (about 5 times in diameter) and results in a clog-free, high reliability component. This is a key factor in the ability of this technology to be extended to a large number array of FNS's without a significant yield problem. The FNS is plumbed to a reservoir of ink which is maintained at a level of about 2 cm above the nozzle exit.

In addition to the geometry, the jetting is dependent on the properties of the ink including viscosity, surface tension, density, electric conductivity and dielectric constant. It has been shown that for a fixed geometry, a jetting regime exists for which the diameter of the stream and the mass/charge flow rate depend only on the fluid properties of the ink and not on the electronic driving characteristics.[18] Thus the amount of ink transferred to paper can be precisely controlled by modulating the voltage pulse width which makes continuous tone printing possible by modulating the spot size on paper. The maximum repetition rate and minimum pulse width for extraction of a given ink is dependent on the charge relaxation time and the flow transient time. Repetition rates of up to 10 kHz have been reported in the literature for single spot size and 1 kHz for 256 spot size levels.[16,18]

By employing a CCD video camera with high magnification optics, a standard VHS video cassette recorder, and a stroboscopic light source, it is possible to observe the formation of the filament nucleation site and the migration of the filament of ink from the nozzle to the platen. A sequence of video photomicrographs shown in Figure 1 illustrates the actual transfer of a large volume filament of ink followed by a small volume. The voltage as a function of event timing for Figure 1 is shown in Figure 2.

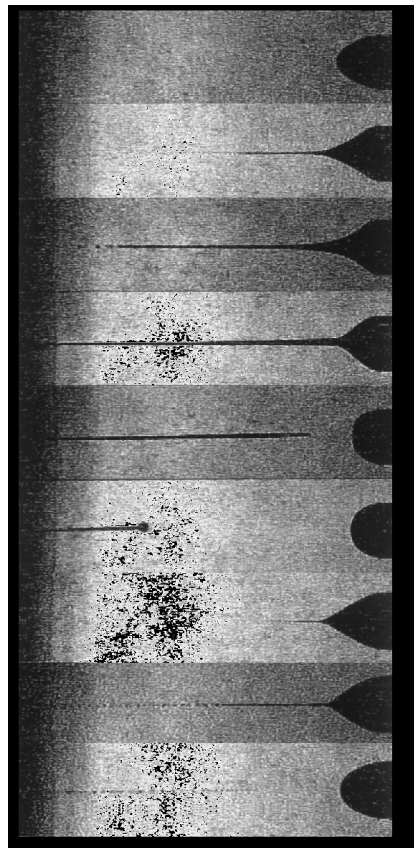

Figure 1. ESIJET™ single channel printing sequence.

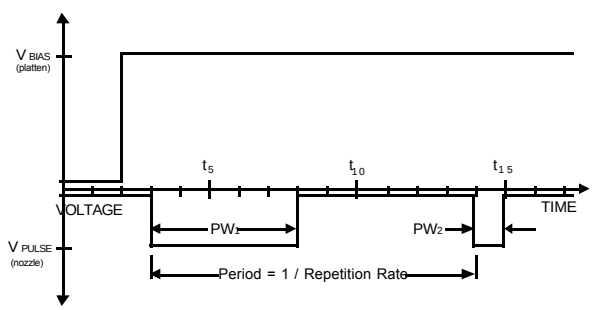

Figure 2. Print head voltage sequence.

Multi-Channel Operation

Peizo and Thermal drop-on-demand ink jet technology make use of multiple channels to attain a throughput necessary for high quality printing that is cost and performance competitive with laser printers. Since ESIJET (printing is a drop-on-demand technology, multi-channel arrays will be necessary. A sequence showing the operation of three FNS's is illustrated in Figure 3. As can be observed, there is very little interaction between the filaments when all three are operating synchronously. However, when the FNS's are operating in the asynchronous mode and or when the FNS's are made on closer center to center spacing, the interaction of the electrostatic fields can be significant enough to cause large displacements of the filaments which results in spot placement error and poor print quality.

The traditional FNS drive methods are shown in Figure 4. The Pulse Only Method relies on switching the entire voltage magnitude necessary to cause filament formation and migration to the substrate. Since the voltage required to initiate the filament for normal printing parameters can be as much as 1200 to 1600 volts, the switching or pulse drive electronics can be quite expensive. It is possible to reduce the switching voltage to the range of 500 to 800 volts by applying a bias voltage of 800 to 1100 volts to either the platen or the FNS. The Opposite and Same Sign Bias/Pulse Methods use this technique to reduce switching voltage as shown in Figure 4. However, this method still requires discrete electronic components for the drive voltage to initiate the filament. As a result, the cost of the electronics would prohibit the use of arrays with a large number of FNS's. An alternate driving technology called the Shadow Pulse Method (Patent Pending) is shown in the lower part of Figure 4. In this method, a sub threshold pulse that is synchronous with the print clock is superimposed on the dc bias

voltage and applied to all of the FNS's in the array. This "shadow pulse" voltage is switched by one high voltage discrete transistor for the entire array. When a print position is needed, only the difference between the shadow pulse plus bias and the print voltage is switched. In this method, the bias voltage is 800 to 1000 volts, the shadow pulse voltage is 400 to 700 volts and the print pulse voltage is 100 to 150 volts. Thus, only the print pulse voltage is switched at each of the FNS's of the array and low cost IC packages can be used. A print sample using the Shadow Pulse Method is shown in Figure 5.

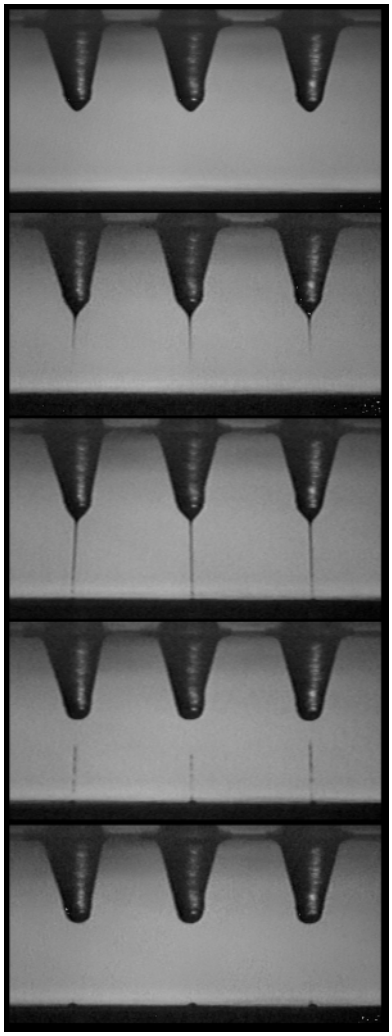

Figure 3. Multi-channel printing sequence.

Multi-Channel Array Fabrication

The ESIJET (print head shown in Figure 6 (Patent Pending) consists of three basic components. The first component is the Electroform (EF) which contains the array of Filament Nucleation Sites (FNS). The second is the printed circuit board (PCB) which supports and interfaces the FNS array to the drive electronics and ink supply. The ink supply is the third component of the print head.

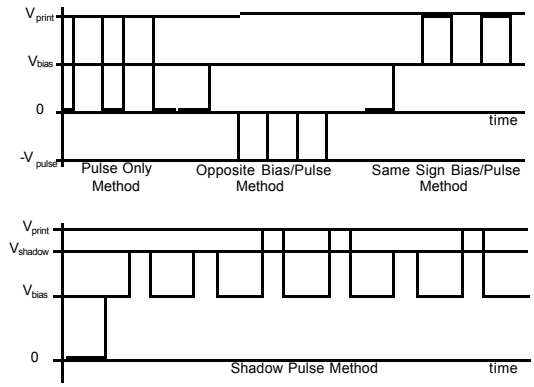

Figure 4. Traditional FNS Drive Methods (top), ESIJET™ FNS Drive Method (Patent Pending, bottom).

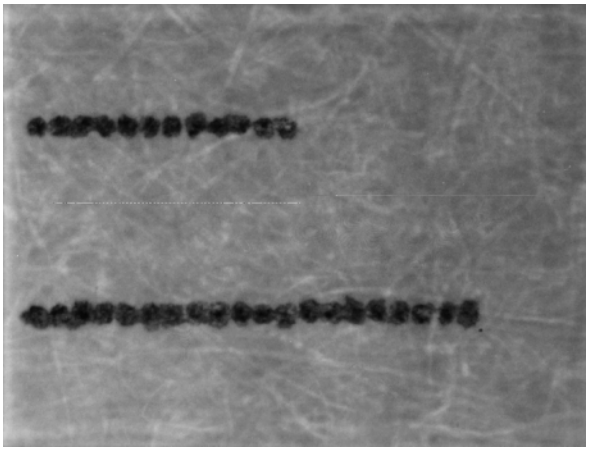

Figure 5. Multi-channel printing (3.6 mil ink spot size).

A drawing of the electroform is shown in Figure 7. This particular design has 8 rows of FNS's spaced center to center at 0.040" within and between rows. The array is approximately 1.5" long and 0.30" wide with 300 FNS's. The body of the array, which also serves as the mandrel for electroforming the FNS's, is fabricated by a molding process for plastic such as polycarbonate. The cross section view in Figure 8 shows that each FNS has a truncated cone shape with a 0.028" diameter, 0.004" wide flange at the base or fluid entry side; a 0.010" tip or fluid exit side diameter with a 0.0015" wall thickness and a height of 0.032". The FNS exit projection above the surface of the plastic is necessary to provide a focal point for the electrostatic field and to provide a physical boundary to prevent meniscus wetting. The Field Compensation Electrode shown in Figure 10 is used to reduce crosstalk by simulating a nearest neighbor to the peripheral FNS's. Each FNS is electroformed using a nickel-cobalt/nickel/gold process. Photographs of a portion of the EF-FNS array showing the exit side, entry side and contact pads are shown in Figure 9. Note that the exterior walls of the FNS are visible through the transparent plastic. High magnification views of the exit side and the entry side are shown in Figure 10. As can be observed, the process is very consistent both within the FNS and among the FNS's.

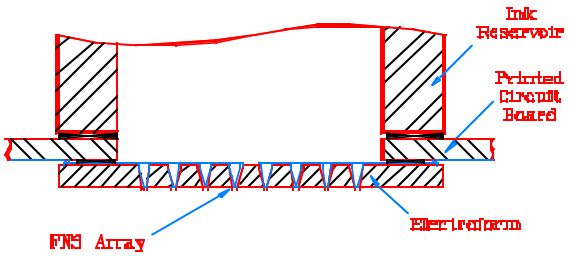

Figure 6. ESIJET™ Print head assembly.

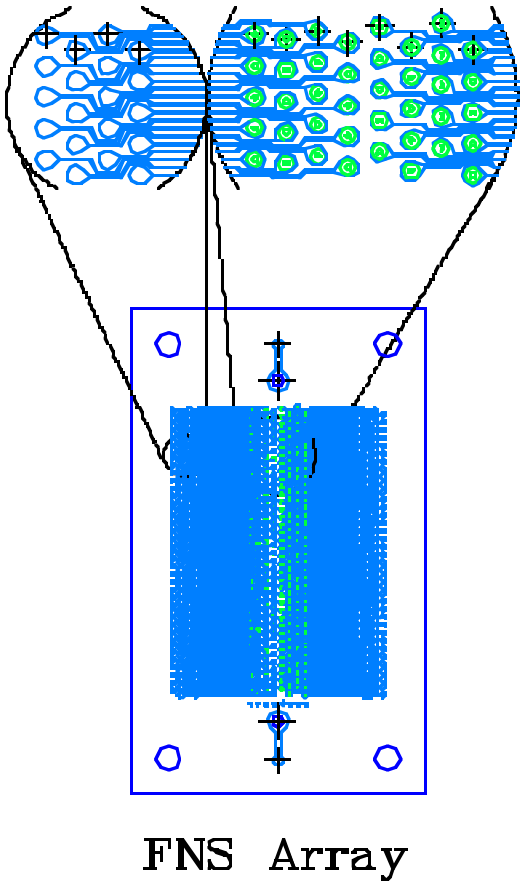

Figure 7. Electroformed FNS Array.

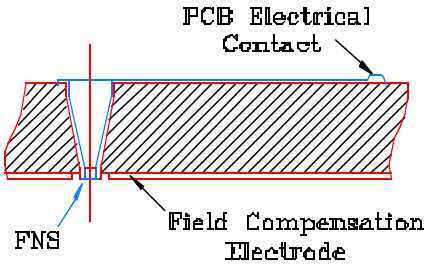

Figure 8. Section view of FNS Electroform.

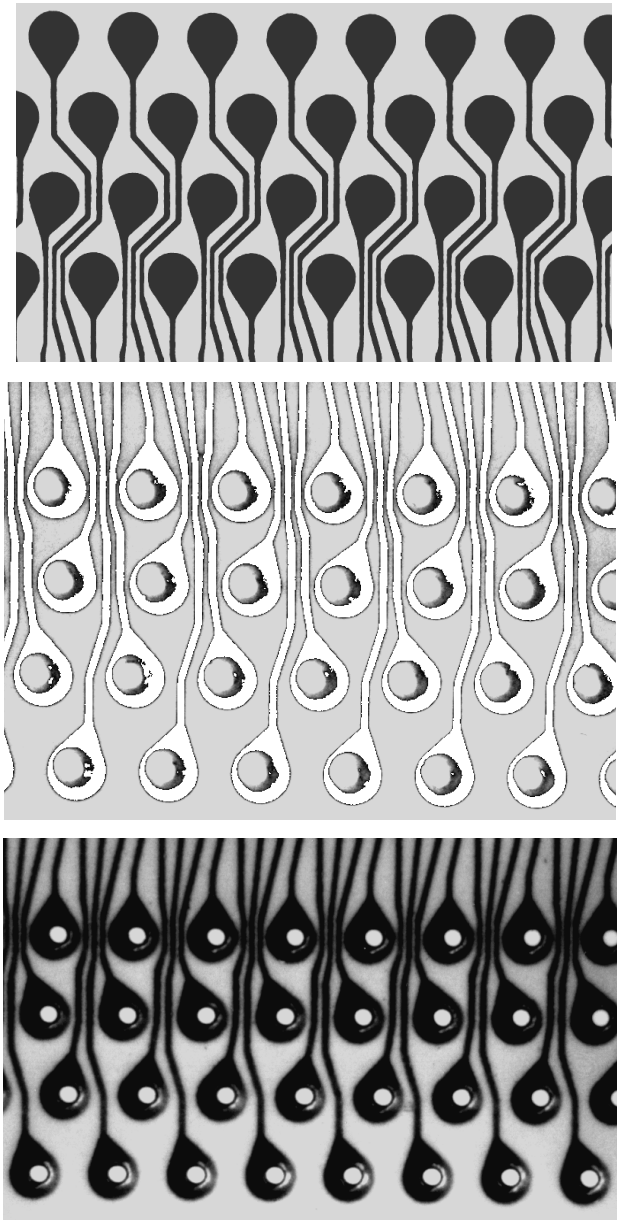

Figure 9. Photomicrographs of contact pads (top), FNS's from entrance side (middle), and FNS's from exit side (bottom)/

Conclusion

ESIJET (technology is a relatively low cost digital direct or offset printing process for page wide arrays at addressabilities of 100 to 600 dpi at process speeds up to 30 ppm. The technology can use pigmented or dye base inks in liquid or solid form. The capability to do spot size modulation in the range of 20 µm to 130 µm from each FNS offers the possibility of superb color and print quality for all types of image and character printing. The permanent print head suitable for a wide variety of ink formulations also offers the opportunity for safe consumables in an environmentally correct printing system.

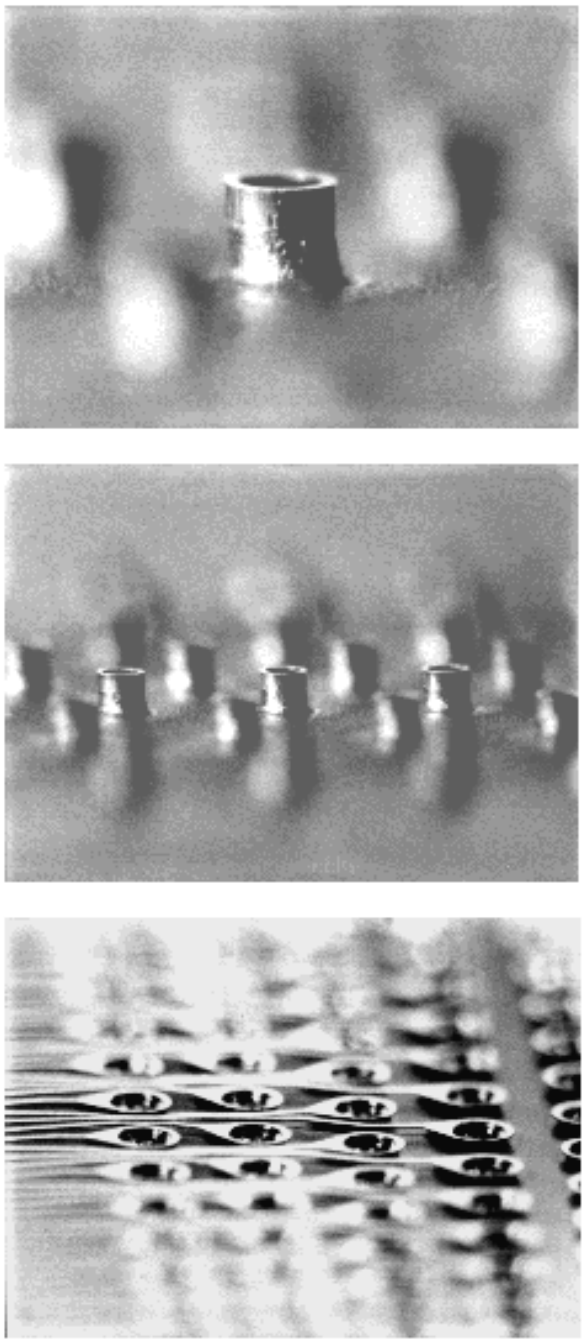

Figure 10. Photomicrographs of a single FNS (top), exit side FNS array (middle), and the entrance side of the FNS array (bottom).

Acknowledgment

The author is grateful to Mr. James E. Kerr, Mr. Jon-Christophe Febvre and Mr. Temple D. Smith for their skillful assistance and engineering contributions to this development project. This work was supported in part by a SBIR Grant from the National Science Foundation.

References

1. R. N. Mills, “Ink Jet Printing - Past, Present and Future”, IS&T's Tenth International Congress on Advanced in Non-Impact Printing Technologies (1994), pp. 410-414.
2. S. F. Pond, “Drop-On-Demand Ink Jet Transducer Effectiveness”, IS&T's Tenth International Congress on Advanced in Non-Impact Printing Technologies (1994), pp. 414-418.
3. G. I. Taylor, “Electrically Driven Jets”, Proceedings of the Royal Society, London, Volume A313, 1969, pp. 453-475.
4. G. I. Taylor, “Disintegration of Water Drops in an Electric Field”, Proceedings of the Royal Society, London, Series A, Volume A280, 1964, pp. 383-379.
5. C. H. Richards, “Apparatus for Producing a Stream of Electrically Charged Multimolecular Particles”, U. S. Patent No. 2,600,129, June 10, 1952.
6. C. R. Winston, “Method of and Apparatus for Transferring Ink”, U. S. Patent No. 3,060,429, October 23, 1962.
7. T. Yanou and M. Urayama, “Nozzle for Ink Jet and Method for Manufacturing the Same”, U. S. Patent No. 3,662,399, May 9, 1972.
8. T. Kashio, “Ink Jet Printing Device”, U. S. Patent No. 3,914,772, October 21, 1975.
9. T. Kashio, Ink Jet Type Character Recording Apparatus, U. S. Patent No.3,958,252, May 18, 1976.
10. R. H. Kocot, R. E. Rudd III and D. R. Arnoldi, “Electrostatic Ink Jet System”, U. S. Patent No. 4,404,573, September 13, 1983.
11. R. E. Rudd III, “Pulsed Aperture for an Electrostatic Ink Jet System”, U. S. Patent No. 4,477,869, October 16, 1984.
12. K. Saito, Y. Fujicaura and N. Inoue, “Thermal-Electrostatic Ink Jet Recording Apparatus”, U. S. Patent No.4,764,777, August 16, 1988.
13. K. Saito and M. Miura, “Beam Jet Print Head”, Proceedings of the Fifth International Conference on Advances in Non-Impact Printing Technologies, San Diego, California, 1989, pp. 298-302.
14. M. Miura, et al., Ink Printing Head Having a Plurality of Nozzles, U. S. Patent No.4,403,228, September 6, 1983.
15. M. Miura and H. Naito, “Ink Jet Printing head Utilizing Air Flow and Electrostatic Field”, Proceedings of the First International Conference on Advances in Non-Impact Printing Technologies, November 1984, pp. 154-156.
16. G. Oda, et al., “Air Assisted Electrostatic Ink Jet Head”, Japan Hard Copy'88, 1988, pp. 177-180.
17. D. H. Choi and F. C. Lee, “Principles of Electrohydrodynamic Ink Jet Printing”, Proceedings of the IS&T's Seventh International Congress on Advanced in Non-Impact Printing Technologies, Volume 2, 1991, pp. 49-58.
18. D. H. Choi and F. C. Lee, “Continuous Gray-Scale Printing with the Electrohydrodynamic Ink-Jet Principle”, Proceedings of the IS&T's Eighth International Congress on Advances in Non-Impact Printing Technologies, 1992, pp. 334-339.